dyaqua
INVISIBLE SOLAR

TECHNICAL DATA SHEET

INVISIBLE SOLAR TUSCAN ROMAN TILE

Photovoltaic module shaped like architectural element made of non-toxic and recyclable polymeric compound.
The module incorporates monocrystalline sillicon cells.
Do not pierce.



BUILDING-INTEGRATED

Equivalent to standard building materials, it perfectly blends with building's aesthetic and architectural features.

SELF-CLEANING

The photocatalytic surfaces dissolves smog and dirt through
an automatic and natural

EXTRA RESISTANCE

Walkable, resists to solvents and atmospheric agents. Excellent resistance to impact and pressure.

SUSTAINABLE

Each module is made by using non-toxic and recyclable materials. Part of which are natural or reused.

TECHNICAL DATA

Version 2.0

Dimensions	45 x 33 x 29 x H2,5 cm
Weight	2,20 kg
Working temperature	-40°C / +85°C
Maximum static load	500,00 kg/pcs
Flammability	BROOF(t1) with fire sheath
Quantity of Invisible Solar modules	6,6 pcs/sqm2
Net absorbent surface (total cells)	0,0703 m2
Operative temperature NOCT	43,5°C
Type of solar cell	Monocrystalline sillicon
Module efficiency	22,17 %

More features

Artisan-made product	Waterproof
Non-toxic and recyclable material	Thermal retarder (about -32%)
Photocatalytic surface	Hard acids and their bases resistant
Walk-over	Resistant to solvent

Electrical performances

Isc - Short circuit current	2,41 A
Voc - Open circuit voltage	3,90 V
Pp - Peak power	11,04 W
Imp - Maximum power current	2,23 A
Vmp - Maximum power voltage	4,95 V
Maximum system voltage	1000 V
General temperature coefficient	-0,5%/°C

All available data are indicated here above. The lack of some data is due to the standard detection and calculation system, because it is based on traditional solar panels. Such system cannot be applied to innovative and non-conventional modules as the Invisible Solar ones.

Sizing example

Nominal power	1 kWp
Quantity	91 Modules
Used area	9,4 smq

This sizing is approximate. In any case the plant must be calculated by a professional

RoHS COMPLIANT · III · UV/IR RADIATION 100% FREE

Dyaqua Srls
Registered office: Via Bonifacio 40/4 • Operative headquarter: Via del Lavoro 1/3 int. 7 • 36043 Camisano Vicentino (VI) - Italy
P.IVA 04096400249
www.dyaqua.it • invisiblesolar@dyaqua.it

TECHNICAL DATA SHEET

INVISIBLE SOLAR TUSCAN ROMAN TILE

DIMENSIONS

Unit of measurement: ***cm***

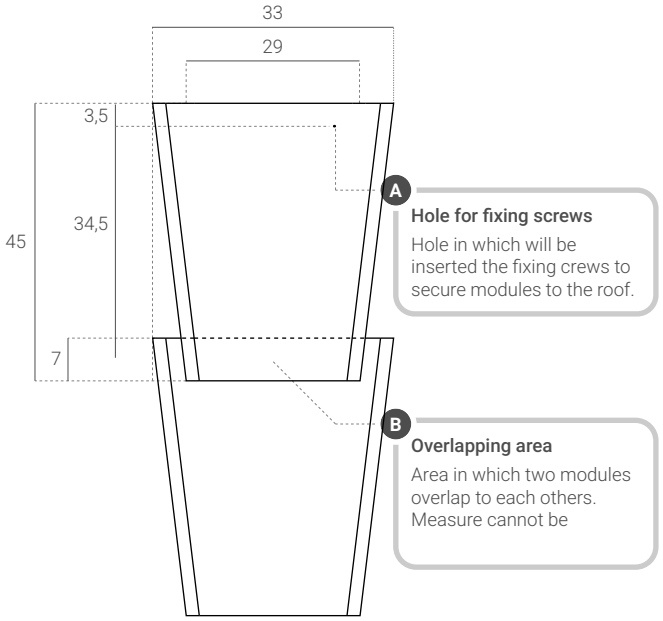

CONNECTION SYSTEM

Included in supplies.

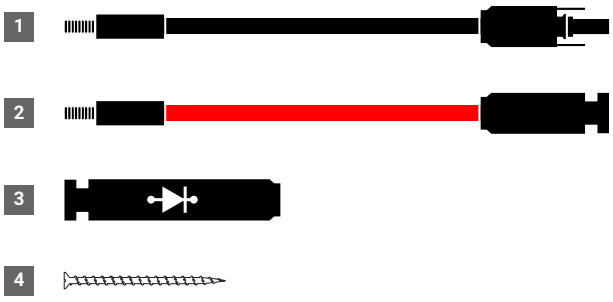

Connection system parts

1. Black negative connector
2. Red positive connector
3. mc4 connector with 20A diode
4. Fixing screw

FURTHER INFORMATION

Artisan-made product

This product is entirely artisan-made. Electrical performances and color may have some differences between one module and another.

Certifications

The Invisible Solar modules are innovative and unconventional, they cannot be tested in accordance with standard certification and, currently, it does not exist a specific certification for this kind of product.
For any further clarification, please contact us.

Suggestions for a correct use

Orientation:
• South: optimal;
• East and West: suitable, but with reduced efficiency;
• North, North-East and North-West: highly not recommended, efficiency is almost zeroed.
Optima inclination is between 20-30%. In case that inclination is different from the recommended ones, there is a loss of efficiency.
Avoid shading.

ATTENTION:
CAREFULLY READ THE INSTALLATION INSTRUCTIONS BEFORE TO USE THE PRODUCT

Electrical performance measurements

Dyaqua has determinated the electrical performances by tests accomplished at Dyaqua's laboratory with 1000 Wm2 irradiance, 25°C connection temperature and spectral distribution of irradiance AM=1,5.
Electrical performances data of the module represent an average value.

Method for main features determination

Dyaqua has performed the following tests at Dyaqua's laboratory, using equipments that were calibrated on Dyaqua's standards, to determine the technical features of the products.
• 50 cycles of 100°C/h thermal vatiations with controlled temperature from -40°C to +95°C;
• 96 hours of salt spray corrosion test;
• 40 cycle of humidity and freezing in a controlled temperature chamber, with thermal variation from -40°C to +95°C and humidity from 0% a 90%.
All these tests are periodically repeated on Invisible Solar modules that are randomly selected from manufacturing batches.

Disposal and Recycle

When the polymeric compound is brought to a temperature above 600°C, it turns into non-toxic and reusable ashes (for example to make mixture for building materials). The materials that are incorporated into module (such as silicon, backed clay powder, stone and anything else) will be available again for reuse. Copper connection will be melted.

Dyaqua Srls
Registered office: Via Bonifacio 40/4 • Operative headquarter: Via del Lavoro 1/3 int. 7 • 36043 Camisano Vicentino (VI) - Italy
P.IVA 04096400249
www.dyaqua.it • invisiblesolar@dyaqua.it